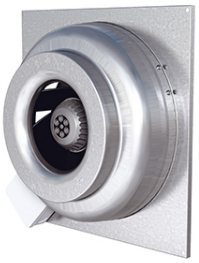

KVFU 250 B ErP

- Wall fan with circular inlet connection.
- KV has a square mounting plate.
- Proven performance and reliability.
- Compact with high capacity and efficiency.
- Suitable for a wide variety of applications.
- Operational in both 50 and 60 Hz.
- Impeller with backward curved blades.
- The external rotor motor has maintenance-free sealed ball-bearings.
- Integrated motor protection.
- Junction box has enclosure class IP 54.
- For speed control a transformer or electronic speed controller can be connected.
- Fan housing is manufactured from galvanized sheet steel.
- The fan is intended to be installed in a duct system, mounted on the inside wall.
- Easy installation in any position.
- Can be used in damp environments.

Accessories

- VRDE 1,5
- VRTE C
- VRS 1.0
- MK 250
- BSV 250
- BSR 355
- VK 355
- RSK 250

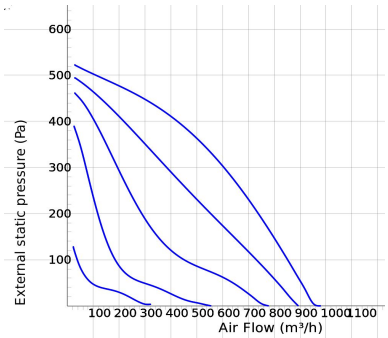

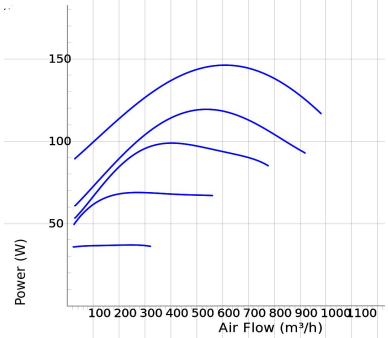

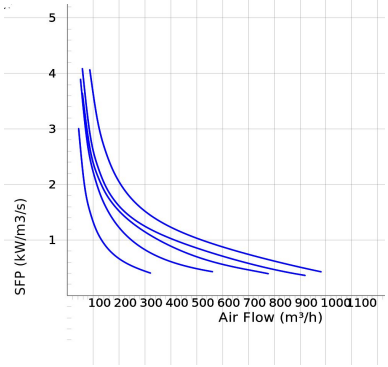

Voltage steps

1	2	3	4	5
80V	110V	135V	165V	230V

TECHNICAL DATA	7100139 KVFU 250 B ErP aut tp	7100145 KVFU 250 B ErP man tp
Voltage	230 V	230 V
Phase	1 ~	1 ~
Frequency	50 Hz	50 Hz
Power	146 W	146 W
Current	0.63 A	0.63 A
Current when speed controlled	0.74 A	0.74 A
Speed	2740 r.p.m.	2740 r.p.m.
Max. temperature of transported air	80 °C	80 °C
Max. temperature of transported air when speed controlled	65 °C	65 °C
Sound pressure level at 3 m	46 dB(A)	46 dB(A)
Weight	4.4 kg	4.4 kg
Enclosure class	44 IP	44 IP
Insulation class, motor	F	F
Capacitor	5 µF	5 µF
Duct connection	250 mm	250 mm
Max. flow	957.60268128751 m³/h	957.60268128751 m³/h
Max. pressure	525 Pa	525 Pa
Voltage range	220-240 V	220-240 V

SOUND DATA	Flow (m³/h)	L_{WA} tot dB (A)	63Hz	125Hz	250Hz	500Hz	1KHz	2KHz	4KHz	8KHz
5. Surrounding Lw dB(A) 230V	752	53	30	32	42	46	49	45	43	38
5. Inlet Lw dB(A) 230V	745	75	58	62	71	65	70	65	64	64
4. Inlet Lw dB(A) 165V	655	72	50	61	68	62	66	61	61	59
3. Inlet Lw dB(A) 135V	583	66	45	52	63	54	57	55	57	41
2. Inlet Lw dB(A) 110V	396	55	38	50	48	44	47	49	40	32
1. Inlet Lw dB(A) 80V	274	47	34	44	41	34	37	36	18	14

DIMENSIONS

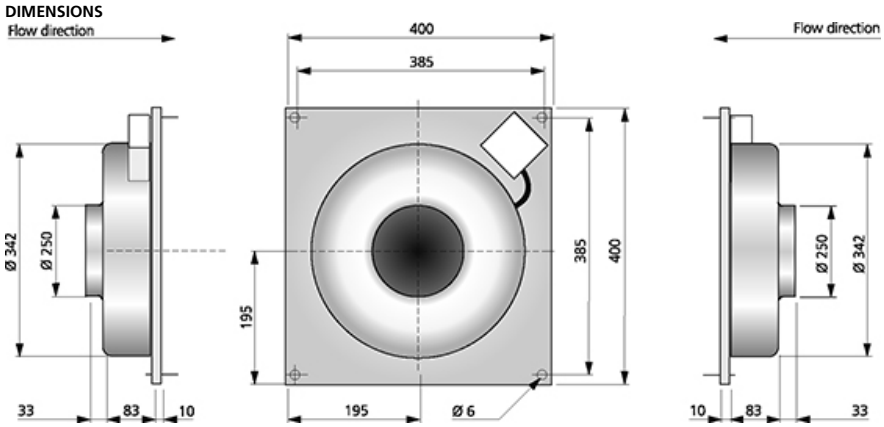

DISTRIBUTEUR EN TUNISIE

Rue de la Fonte, zone industrielle 2013 BEN AROUS
Téléphone : 71 38 85 34 – Fax : 71 38 42 30
E-mail : atv@atv.tn
Site web : www.atv.tn